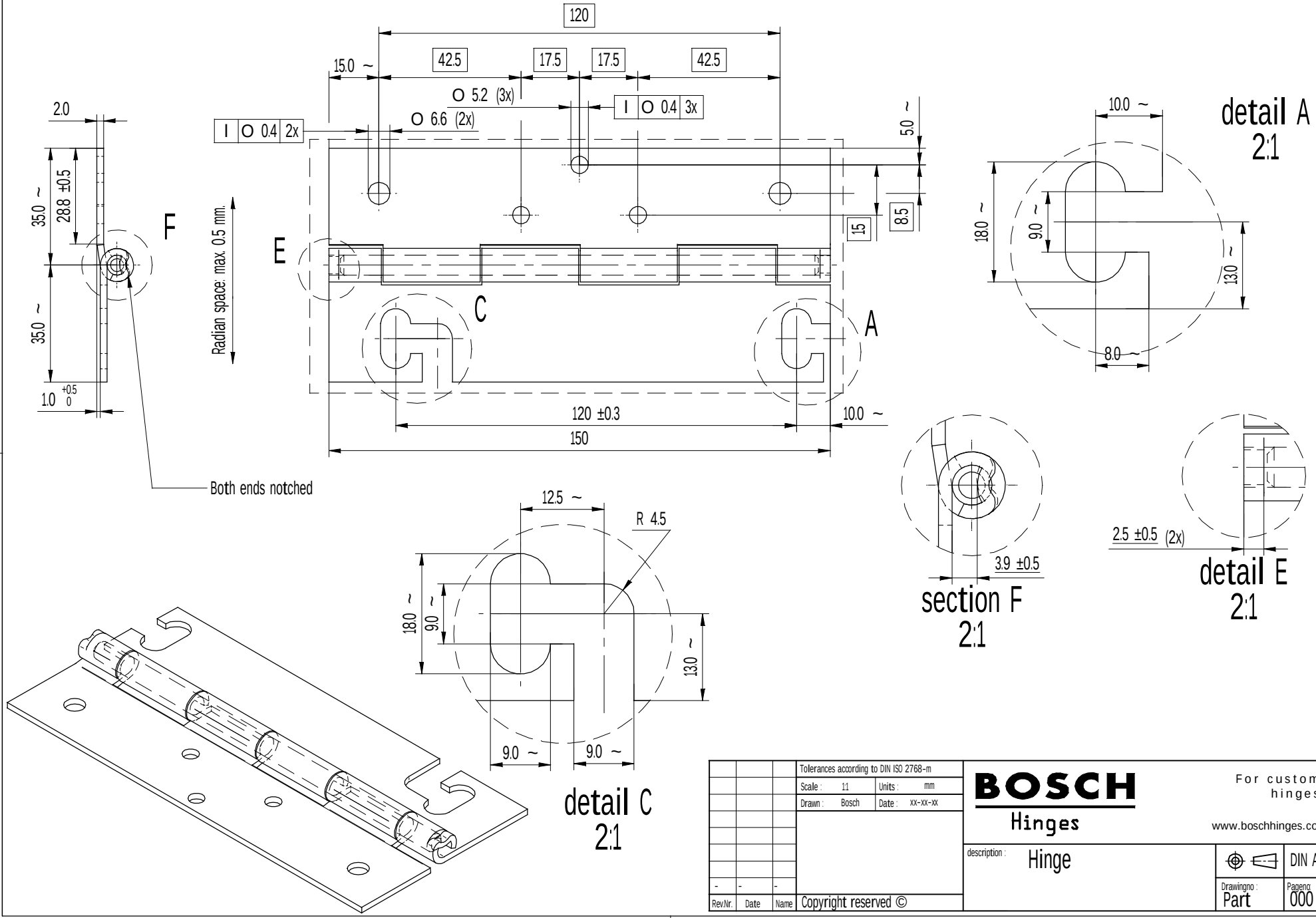
120
15.0 ~
42.5
17.5
17.5
42.5
O 5.2 (3x)
O 6.6 (2x)
I O 0.4 2x
I O 0.4 3x
5.0 ~
15
8.5
2.0
35.0 ~
28.8 ±0.5
35.0 ~
1.0 +0.5 0
F
E
C
A
Radian space: max. 0.5 mm.
120 ±0.3
150
10.0 ~
Both ends notched
detail A
2:1
10.0 ~
18.0 ~
9.0 ~
13.0 ~
8.0 ~
12.5 ~
R 4.5
18.0 ~
9.0 ~
13.0 ~
9.0 ~
9.0 ~
detail C
2:1
3.9 ±0.5
section F
2:1
2.5 ±0.5 (2x)
detail E
2:1
Tolerances according to DIN ISO 2768-m
Scale : 1:1
Units : mm
Drawn : Bosch
Date : xx-xx-xx
Rev.Nr.
Date
Name
Copyright reserved ©
BOSCH
Hinges
For custom hinges
www.boschhinges.com
description : Hinge
DIN A3
Drawingno : Part
Pageno 000